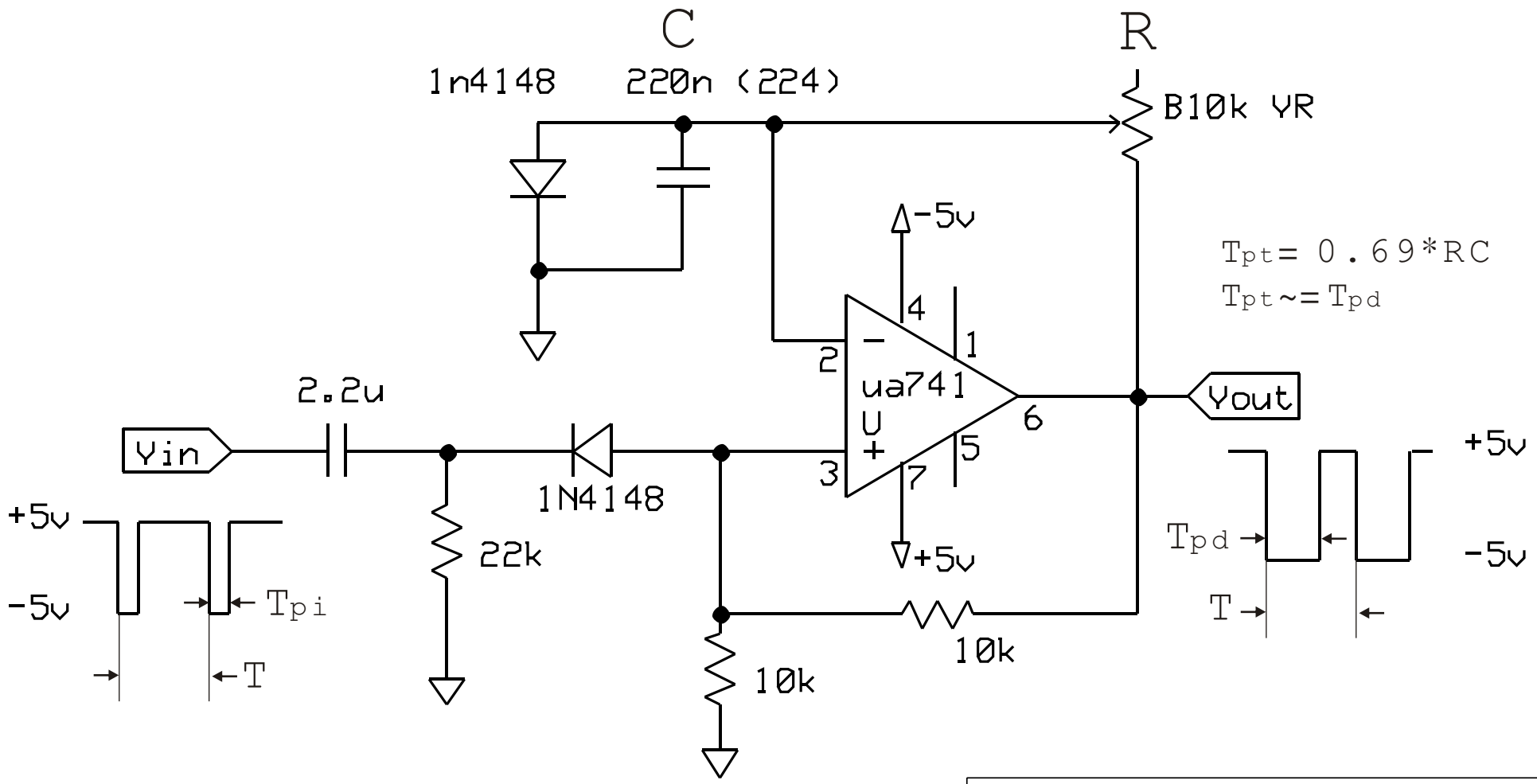

Experimental Physics Lab		
One-Shot circuit		
Chih-Han Lin	Rev 1.0 2010/10/11	ASSY01